X-Axis Motor wiring diagram		
Signal	Color (CF10.05.05)	8-10-0104 Male
U	Brown	1
V	White	4
W	Grey	3
GND	Shield	Case
T+	Yellow	5
T-	Green	6

Y-Axis Motor wiring diagram		
Signal	Color (CF10.07.05)	8-10-0104 Male
U	Black-2	1
V	Black-1	4
W	Black-3	3
GND	Shield	Case
T+	Black-4	5
T-	Yellow/Green	6

Positioning Measurement-Absolute(BiSS-C)			
Function	Signal	Color	8-10-0089 Male
Power	5V	Brown	4
			5
	0V	White	12
		Green	13
Clock	MA+	Violet	7
	MA-	Yellow	6
Data	SLO+	Grey	11
	SLO-	Pink	3
Outer Shield	Shield	-	Case

Limit switch wiring diagram		
Signal	Color	D-Sub Male-9P
2-A	Black	1
-	Blue	2
		3
		4
		5
+	Brown	6
1-A	Black	7
		8
		9

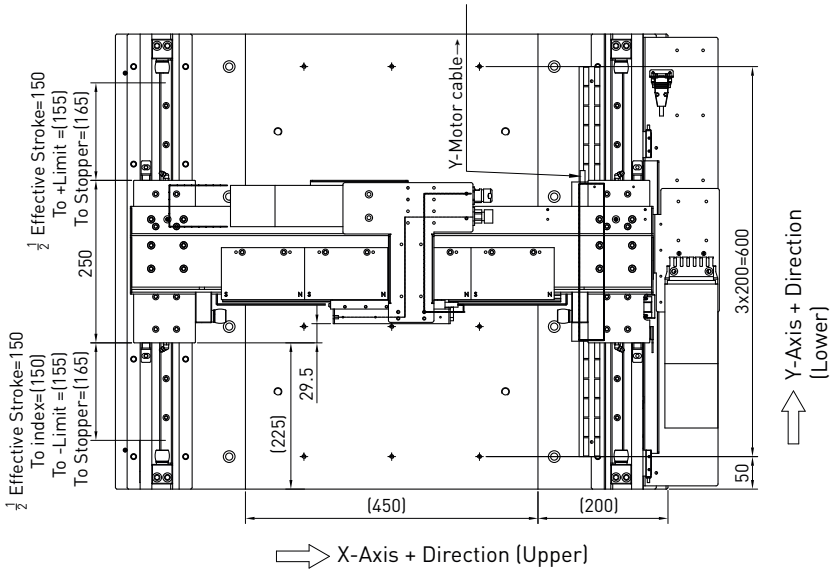

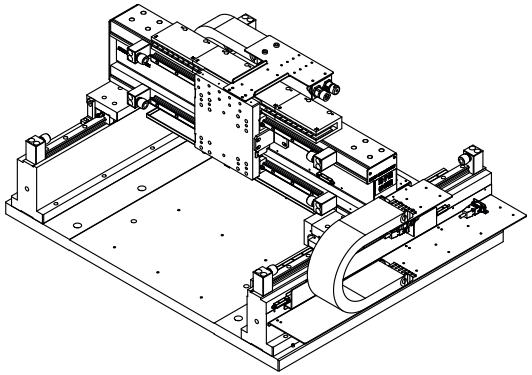

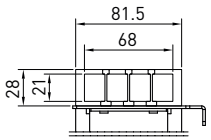

View B (Cable inlet)
Y-axis Cable Chain type：
1400.068.075.0
21.1*3 per 2 elements

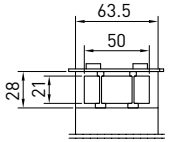

View A (Cable inlet)
X-axis Cable Chain type：
1400.050.048.0
21.1*2 per 2 elements

StageType	LMG2A-CB5-CEFE4-300-300-X10C
Motor Type	X-axis(upper) ： LMCB5； Y-axis(lower)： LMCEFE4
Stroke (mm)	X-axis(upper) ： 300； Y-axis(lower) ： 300
Repeatability (μm)	X-axis ： ± 2； Y-axis ： ± 2 (with HIWIN solution)
Accuracy (μm)	X-axis ： ± 3； Y-axis ： ± 3 (with error-mapping)
Max. Velocity (m/s)	X-axis ： 0.5； Y-axis ： 0.5 (with payload)
Max. Acceleration(m/s^2)	X-axis ： 5； Y-axis ： 5 (with payload)
Linear Encoder	Absolute，BiSS 26 bit ，50nm，EL26BBB050FxxA
Linear Scale	RTLA50-S
Vertical Straightness (μ m)	± 10 / 300 mm
Horizontal Straightness (μ m)	± 10 / 300 mm
Yaw (arc-sec)	± 10 / 300 mm
Pitch (arc-sec)	± 10 / 300 mm
Orthogonality (arc-sec)	10 (200x200mm central stroke)
Limit Switches	Wenglor Inductive PNP (NC)， I1BH009
Moving Slide	Aluminum with black anodized finish
Stationary Base	Aluminum with black anodized finish
Payload (kg)	10
Moving Mass (kg)	X-axis ： (5) ； Y-axis ： (40)
Stage Weight (kg)	(140)
Grease Type	HIWIN G04 (for normal environment)
Input voltage(V)	220
Drive architecture	Single
Drive Type	HIWIN ED1 recommended
Stage orientation	Horizontal

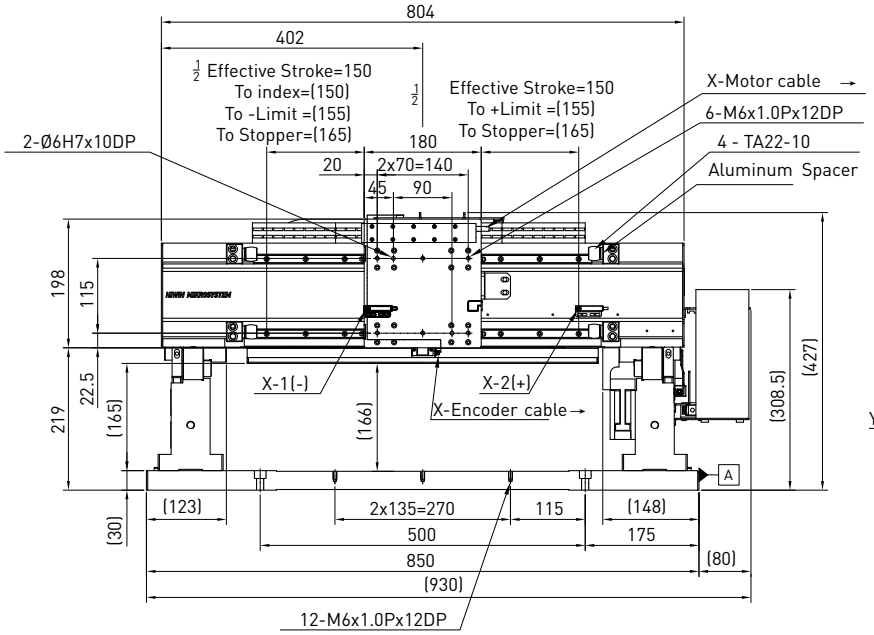

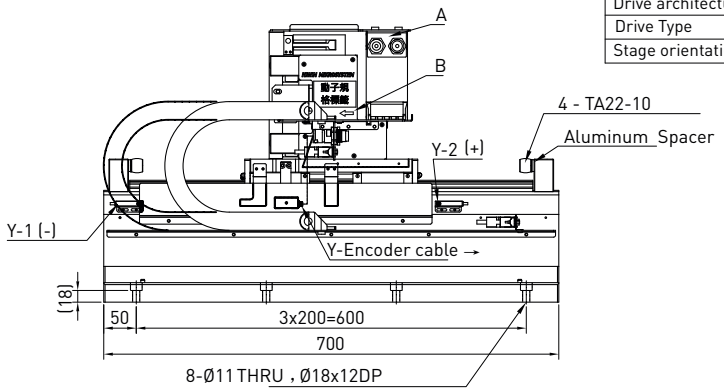

| HIWIN MIKROSYSTEM CORP. | | |